별첨 1. 정보통신단체표준 작성 샘플

TTA Standard

정보통신단체표준(영문표준)

*( )안에는 국문표준/영문표준/잠정표준/기술규격 등 기술

TTAx.xx-xx.xxxx/R1 제(개)정일: 20xx년 xx월 xx일

TTAx.xx-xx.xxxx/R1-Cor1 오류정정일: 20xx년 xx월 xx일

*개정 표준의 경우는 최종 개정일 이력만 기재함

M2M 단말의 P2P 통신 시나리오 및 기본 요구사항

Scenarios and basic requirement of P2P communication for M2M devices

(앞 표지)

한국정보통신기술협회
Telecommunications Technology Association

정보통신단체표준(국문표준)

*( )안에는 국문표준/영문표준/잠정표준/기술규격 등 기술

TTAx.xx-xx.xxxx/R1 제(개)정일: 20xx년 xx월 xx일

TTAx.xx-xx.xxxx/R1-Cor1 오류정정일: 20xx년 xx월 xx일

*개정 표준의 경우는 최종 개정일 이력만 기재함

M2M 단말의 P2P 통신 시나리오 및 기본 요구사항

Scenarios and basic requirement of P2P communication for M2M devices

한국정보통신기술협회
Telecommunications Technology Association

본 문서에 대한 저작권은 TTA 에 있으며, TTA 와 사전 협의 없이 이 문서의 전체 또는 일부를 상업적 목적으로 복제 또는 배포해서는 안 됩니다.

Copyright© Telecommunications Technology Association YYYY. All Rights Reserved.

Preface

1. Purpose of Standard

The purpose of this standard is to define advanced M2M service concept for peer-to-peer(P2P) between M2M devices. And, It also define service model and scenarios of P2P communication. Also, this standard defines basic requirements of P2P communication for realizing proposed scenarios

2. Summary of Contents

This standard defines scenarios and requirements of P2P communication between M2M devices. In detail,

- Definition of M2M device and M2M communication service
- Scenarios of P2P communication
- Requirements of P2P communication

3. Applicable fields of industry and its effect

This standard defines the concept of P2P communication between M2M devices and requirements. This standard can be reference of P2P communication between M2M devices.

4. Reference Standards (Recommendations)

4.1. International Standards (Recommendations)

- ETSI TS 102 690 V1.1.1, “Machine-to-Machine communications (M2M);Functional architecture”, 2011

4.2. Domestic Standards

5. Relationship to Reference Standards(Recommendations)

5.1. Relationship of Reference Standards

The definition and the architecture of M2M communication is specified in ETSI TS 102 690 “Machine-to-Machine communications (M2M): Functional architecture”. This standard suggests additive M2M communication model, P2P communication.

5.2. Differences between Reference Standard(recommendation) and this Standard

TTAS.KO-01.0001/R1	ETSI TS 102 690	Remarks
1. Introduction	-	added
2. Scope of this standard	-	added
3. Reference standards	-	added
4. Terms and definitions		added
5. Advanced M2M service concepts	6. Reference points	added
6. Scenarios of P2P communication between M2M devices		Added

6. Statement of Intellectual Property Rights

IPRs related to the present document may have been declared to TTA. The information pertaining to these IPRs, if any, is available on the TTA Website.
No guarantee can be given as to the existence of other IPRs not referenced on the TTA website.
And, please make sure to check before applying the standard.

7. Statement of Testing and Certification

7.1. Object of Testing and Certification

- None

7.2. Standards of Testing and Certification

- None

8. History of Standard

8.1. Change History

Edition	Issued date	Outline
The 1st edition	2012.08.31	~~Established TTAx.xx-xx.xxxx~~

8.2. Revisions

- None

Contents

1. Introduction ····· 1

2. Constitution and Scope ····· 1

3. Reference Standards (Recommendations) ····· 1

4. Terms and Definitions ····· 1

5. Advanced M2M service concepts ····· 2

5.1. M2M device concepts ····· 2
5.2. M2M communication service concepts ····· 3

6. Scenarios of P2P communication for M2M devices ····· 6

6.1. P2P communication with physical world discovery ····· 6

6.2. P2P communication with digital world discovery ····· 6

7. Requirements ····· 7

Scenarios and basic requirement of P2P communication for M2M devices

1. Introduction

This standard defines the M2M service concepts for Peer-to-peer (P2P) communications and describes P2P communication scenarios in M2M services. It also specifies the requirements of P2P communication to realize the scenarios. M2M communication service has communication between an M2M service platform and an M2M device, but also communication between M2M devices. The former is specified in ETSI TS 102 690 "Machine-to-Machine communications (M2M): Functional architecture". This standard suggests the latter M2M communication model, P2P communication between M2M devices

2. Constitution and Scope

It contains the following clauses:.

In section 4, define abbreviations
In section 5, define concept of advanced M2M device
In section 6, describe scenarios of P2P communication between M2M devices
in section 7, define basic requirements for P2P communication between M2M devices

3. Reference Standards

- ETSI TS 102 690 V1.1.1, "Machine-to-Machine communications (M2M);Functional architecture", 2011

4. Abbreviations

4.1. M2M communication service

The service that M2M service provider offers is provided based on data from M2M devices. M2M communication service is divided into two parts: communication service between M2M service platform and M2M device, communication service between M2M devices. The former is suggested by ETSI standard while the latter is suggested by this standard.

4.2. M2M device

Device that subscribes to M2M service is able to use M2M communication service.

4.3. Peer-to-peer(P2P) communication

P2P communication is M2M communication between M2M devices without using M2M service platform. M2M service platform could be used for essential process such as authentication or searching, but data is transferred without M2M service platform. P2P communication is divided into two categories: P2P communication using network such as GSM, 3G, LTE, WiFi etc. and P2P short-range communication using Bluetooth, ZigBee etc.

4.1.3. M2M service platform

M2M service platform performs authorization, authentication, searching and data storage for M2M services.

5. Advanced M2M service concepts

In this section, advanced M2M service concepts are defined.

5.1. M2M communication service concepts

Discovery and *service* procedure are needed for M2M communication service. *Discovery* procedure is to find M2M device which M2M device want to communicate with. *Service* procedure is to perform M2M communication service M2M device which is selected by *discovery* procedure.

M2M communication service is performed in two parts: *Digital world* and *physical world*. Digital world is a digital domain where the M2M service platform exists. *Physical world* is a physical domain where the real device exists.

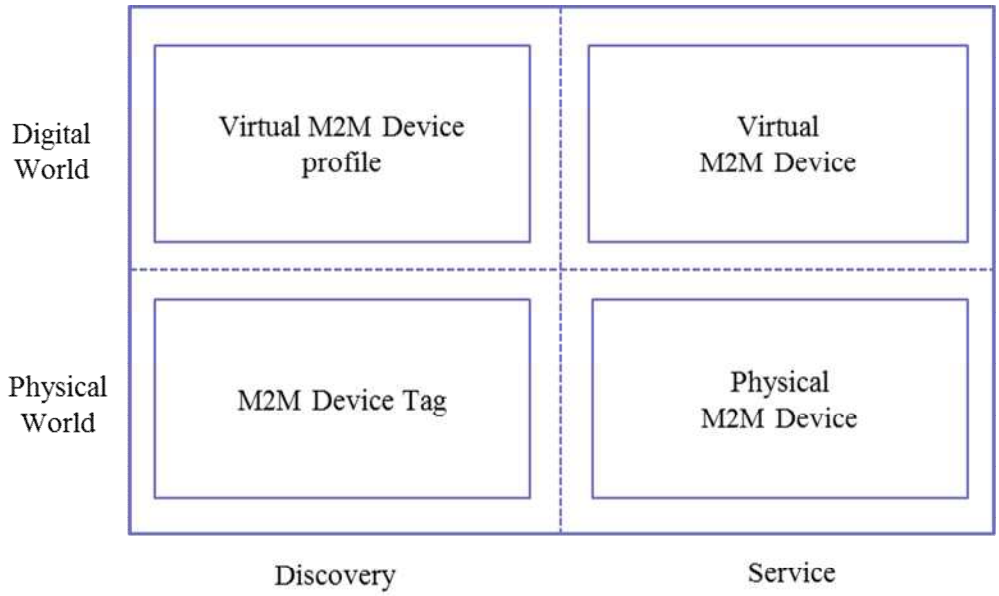

A. M2M device tag

M2M device tag is defined that M2M device profile information exists in the physical world for the M2M device discovery. The *P2P direct communication* needs the M2M device tag information to identify M2M device and receive profile information of the M2M device.

B. Virtual M2M device profile

Virtual M2M device profile is defined that M2M device profile information exists in digital world for M2M device discovery. Basic information of M2M device, for example profile information or location information, is registered in virtual M2M device profile.

C. Physical M2M device

Physical M2M device is defined that the M2M device in real world.

D. Virtual M2M device

Virtual M2M device is defined that virtual entity in the M2M service platform corresponding to the physical M2M device. ETSI standard define architecture of virtual M2M device.

5.2. M2M communication service

In this section, M2M communication service is defined.

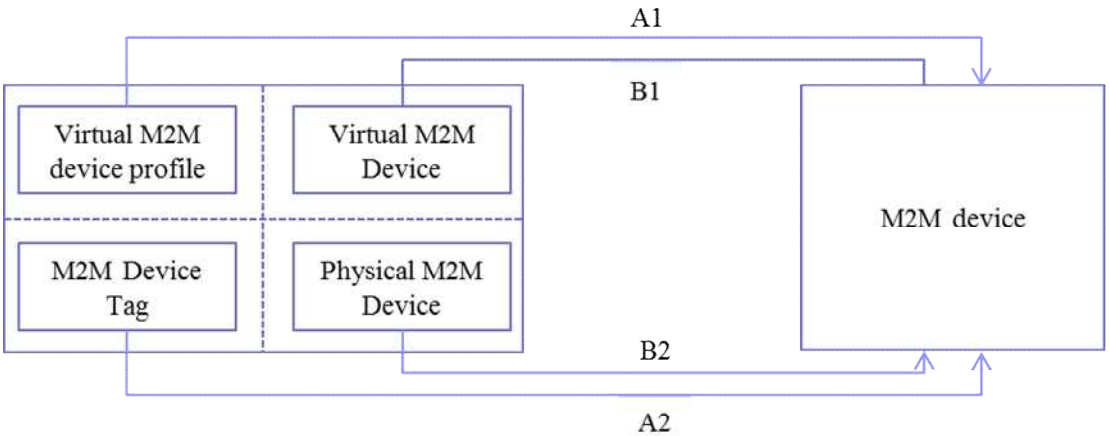

A. Device & service discovery

This procedure is device & service discovery procedure. There are two ways of discovery procedure.

A1. Discovery in digital world

A Request M2M device finds other M2M device in *the digital world*, and receives the M2M device profile information..

A2. Discovery in physical world

A Request M2M device receives other M2M device profile information by reading M2M device tag (ex. NFC, QR code, Bluetooth, ZigBee etc.) which exists in *the physical world.* This procedure is used for the *P2P direct communication.*

B. M2M communication Service

This procedure is M2M communication service procedure. There are two ways of the service procedures

.

B1. M2M communication service in digital world

This procedure is a communication between the M2M device and virtual M2M device. This procedure is same as the M2M communication which is specified in ETSI standard.

B2. M2M communication service in physical world

This procedure is a communication between the M2M devices. It is defined as P2P communication. In other words, It is the communication between physical M2M devices.

.

6. Scenarios of P2P communication between M2M devices

6.1. P2P communication with physical world discovery

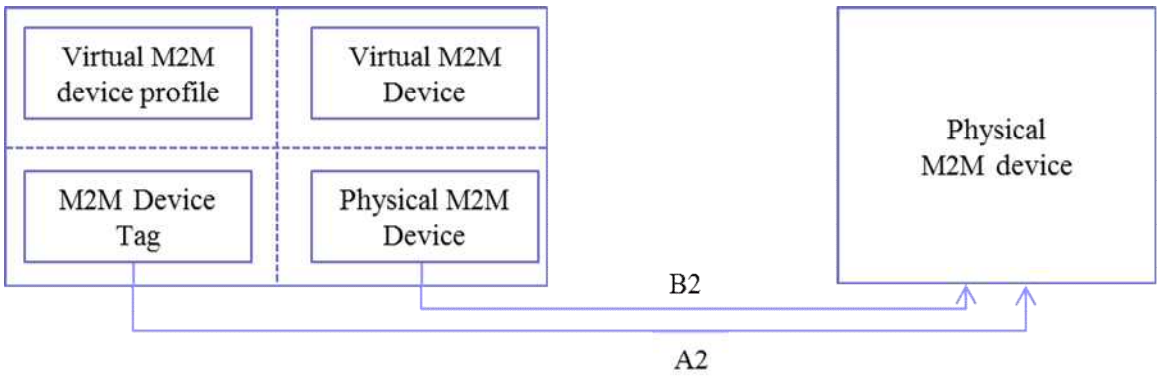

(그림 5-1) 그림 제목

Find other device by discovery based on physical tag and make p2p connection. For example, a M2M service user using a Smart phone receives profile information of bending machine through NFC. Subsequently, the smart phone runs appropriate application from the profile information. By using the application, P2P connection between the smart phone and the bending machine is set up.

6.2. P2P communication with digital world discovery

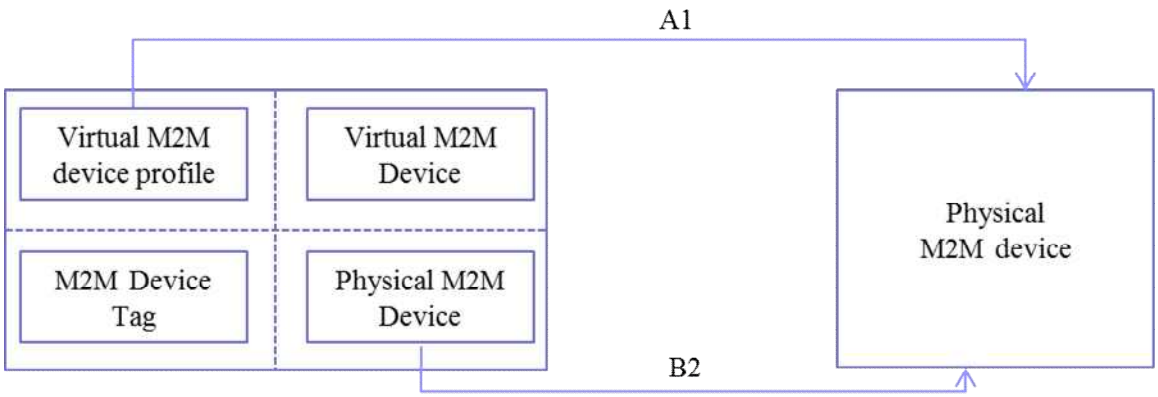

Find other device by discovery based on virtual M2M device profile and make P2P connection. For example, a M2M service user using a Smart phone search other device through digital world. The M2M service user selects a M2M device and gets the M2M device profile information from digital world. Authentication and addressing information are also transmitted to the M2M service user. Finally, the smart phone accesses the M2M device and makes P2P connection with the device.

6.3. P2P communication with P2P connection broker

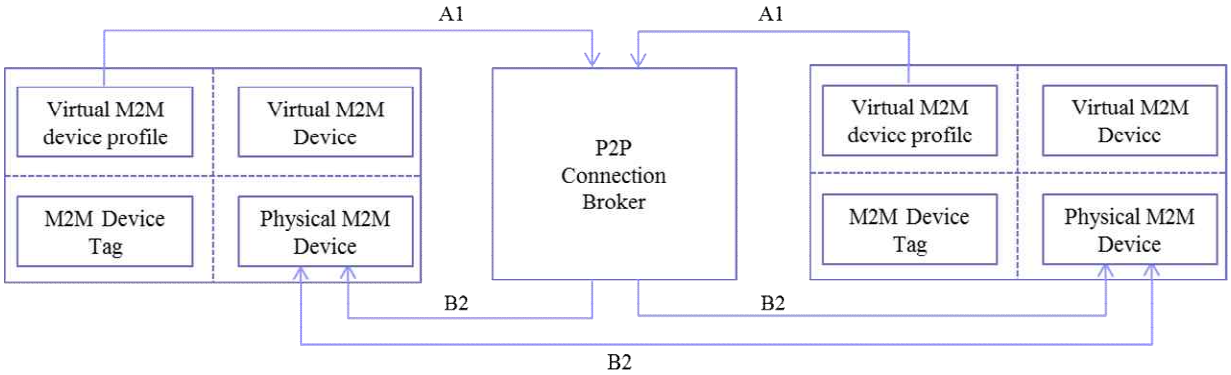

This scenario is for communication between non-user M2M devices. The P2P connection broker bridges two M2M devices for P2P communication. For example, a thermal sensor takes the temperature. If the temperature exceeds a certain temperature, the sensor directly controls the air conditioner. At this time, the home server performs a role as P2P connection broker between two devices.

6. Requirements

6.1 Device search

Device search scheme should be provided for what a M2M service user wants to communicate with. Discovery schemes in digital world to get device profile information should be provided. Also, search schemes such as location-based scheme or context-based scheme should be provided.

6.2. Authentication

If P2P communication with digital world discovery is used, the M2M service platform should verify validation of devices by using authentication. Also, both devices should use the authentication information to prove validation of the P2P connection.

6.3. Security

M2M service platform should decide the security level to be used for P2P connection and guarantee the security of P2P connection between two devices by using authentication keys.

6.4. Addressing

The M2M service platform should inform address information to a request M2M device. This information is used to make P2P connection between two devices.

6.5. P2P connection to the Sleeping-Mode Device

If a request M2M device tries to make connection with other device which is in sleeping-mode, the P2P connection procedure should be set up.

6.6. Re-connection for P2P communication failure

When P2P communication fails, the M2M service platform have to know P2P connection failure and re-connection procedure should be set up.

6.7. P2P connection broker

If M2M devices can't make P2P connection by themselves, the P2P connection broker should support P2P connection between those devices.

표준작성 공헌자

표준 번호 : TTAx.xx-xx.xxxx/R1

이 표준의 제.개정 및 발간을 위해 아래와 같이 여러분들이 공헌하였습니다.

구분	성명	위원회 및 직위	연락처	소속사
표준 제안	김재호	PG311 위원	jhkim@keti.re.kr	KETI
	이재용	-	jyl@yonsei.ac.kr	Yonsei Univ.
	강봉주	PG708 위원	supem@sk.com	SK Telecom
	윤재석	-	jaeseok@keti.re.kr	KETI
표준 초안 작성자	윤재석	-	jaeseok@keti.re.kr	KETI
	김종헌	-	roro7773@yonsei.ac.kr	Yonsei Univ.
표준초안 검토	안재영	PG708 위원	ahnjy@etri.re.kr	ETRI

(뒷 표지)

정보통신단체표준(국문표준)

국문 표준명
(영문 표준명)

발행인 : 한국정보통신기술협회 회장
발행처 : 한국정보통신기술협회
463-824, 경기도 성남시 분당구 서현동 267-2
Tel : 031-724-0114, Fax : 031-724-0019
발행일 : 20xx.xx