TR-0007: Study of Abstraction and Semantics Enablements (v-0.11.0)

Contents

- Overview
- Introduction on Abstraction and Semantic Capability Enablement in oneM2M
- Abstraction Technologies
- Technologies for Semantic M2M System
- Support for Abstraction and Semantics in oneM2M
- Conclusions and next steps

Work scope of oneM2M TR ABS (0007)

- Collect and describe the state-of-the-art technologies and/or solutions
  - Enable development of **oneM2M abstraction capabilities** (e.g. abstraction of heterogeneous devices including their monitoring and controlling)
  - Enable development of **oneM2M capabilities for semantic description** of oneM2M entities and data
  - Provide **means to discover Devices, Virtual Devices and Things** (physical entities) based on their semantic descriptions

- Analyse the collected technologies and/or solutions to match with the oneM2M requirements on abstraction and semantic aspects

- Evaluate the possibility of leveraging all or part of those technologies and/or solutions by oneM2M architecture and protocols.

Status of the document

- The TR includes both Abstraction and Semantics aspects
  - The work started from TP#3
    - Supporters: France Telecom (ETSI), Huawei (CCSA), NEC (ETSI), Alcatel-Lucent (ETSI), France Telecom Beijing (CCSA), NEC (TTC), Alcatel-Lucent (ATIS), Motorola Mobility (ETSI), InterDigital (ETSI), **Modacom (TTA)**
  - The latest version (v.-0.11.0) for oneM2M Release 1
    - Approval (TP#12, August 2014)
- The TR will include recommendations for the Requirements TS and the Architecture TS.
  - oneM2M WG5 will continue the work for improving the TR

Introduction on Abstraction and Semantic Capability Enablement in oneM2M

Abstraction versus Semantics - 1

- Abstraction
  - aims at hiding the complexity of the specific technologies
  - a M2M System decouples M2M applications from specific end device implementations

- Semantics
  - The meaning of oneM2M entities and data
  - Behavior of entity types

Abstraction versus Semantics - 2

- High Level Illustration
  - a new virtual entitiy through mash-up of related data after analysing the request and identifying required data

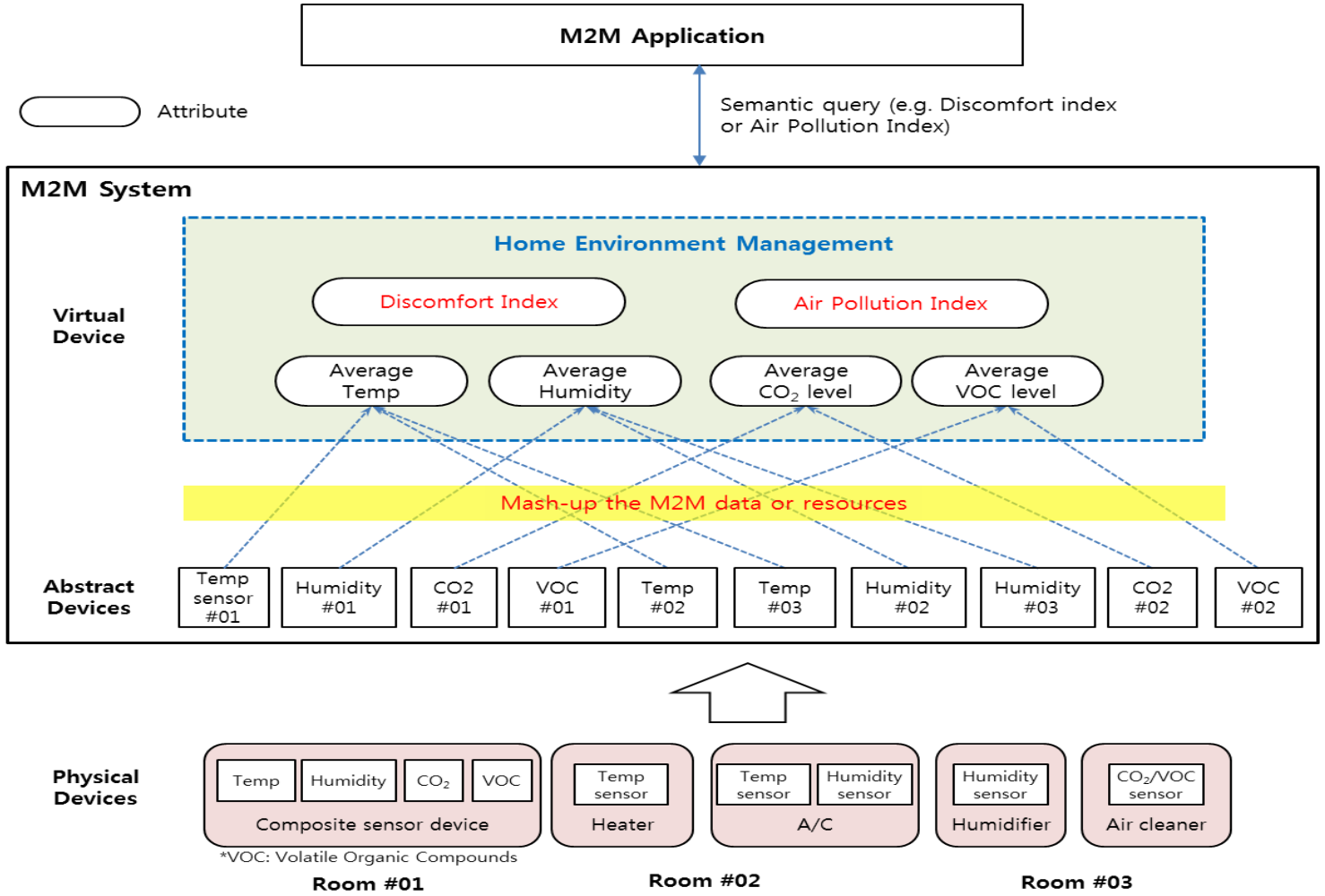

Abstraction Technologies

Requirements on abstraction (TS-0002)

- A M2M Service that allows an M2M Application to use a generic, "abstract" interface to access the functions a set of devices irrespective of the specific technology they support.

Requirement ID	Description	Release
ABR-001	The M2M system shall provide a generic structure for data representation.	
ABR-002	The M2M system shall be able to provide translation mechanisms among Information Models (including meta-data) used by M2M Applications, M2M Devices/Gateways, and other devices.	
ABR-003	The M2M System shall provide capabilities to represent Virtual Devices and Things, (which are not necessarily physical devices.)	

Basics about Interworking and Representation

- Interworking Proxy
  - Interworking allows an M2M Application to use devices from other technologies (e.g. ZigBee or BACnet) that are attached to the M2M System.
- Representation
  - map the native interface of the device (e.g. ZigBee, BACnet,…) into oneM2M resources that can be accessed by M2M Applications. These resources are called a oneM2M Representation of the Information Model of the native device

ETSI M2M device abstraction – 2

- High-level architecture for supporting device abstraction

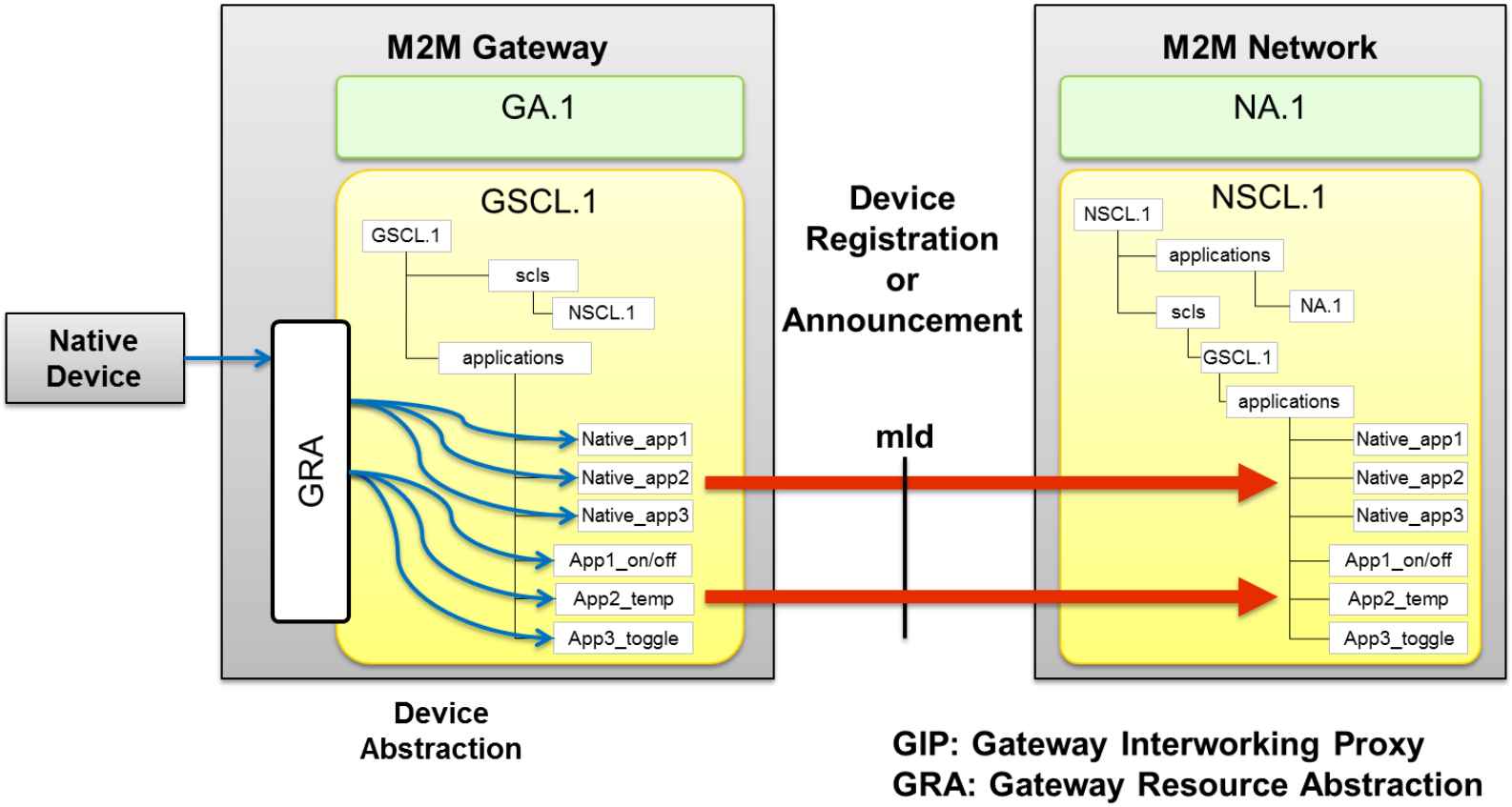

ETSI M2M device abstraction – 3

- **Gateway Resource Abstraction (GRA)** Capability
  - Detects any additions of new native resources in the GSCL.
  - Generates an abstracted resource from the native resource, which is non ETSI compliant resource.
  - Links native resources to their corresponding abstract resources.
  - Registers abstract resources to the NSCL.
  - Subscribes to native resources to be notified any updates.
  - Synchronize abstracted resources to their native resources.
  - Provides functional mapping between the abstracted information (i.e. generic attributes and commands) and the underlying network specific information.
  - GRA may either be an internal capability of GSCL or an application communicating via reference point dIa with GSCL. GRA can also be merged with the xIP (i.e. GIP, NIP and DIP) capability, so that provides resource abstraction and interworking capabilities together.

Technologies for Semantic M2M System

Requirements on semantics (TS-0002)

- Semantics can provide machine interpretable descriptions using meta-data and annotations.

Requirement ID	Description	Release
SMR-001	The M2M System shall provide capabilities to manage semantic descriptions of resources and M2M Applications, e.g, create, retrieve, update, delete, associate/link.	
SMR-002	The M2M System shall support a common modeling language for semantic descriptions (including relationships between Things) in order to make them available to M2M Applications.	
SMR-003	The M2M System shall be able to provide interworking capabilities between different modeling languages for semantic descriptions.	
SMR-004	The M2M System shall provide capabilities to discover M2M Resources based on semantic descriptions.	
SMR-005	The M2M System shall support the capability to access semantic descriptions which are outside of the M2M System.	
SMR-006	The M2M System shall be able to support capabilities for performing M2M data Analytics based on semantic descriptions from M2M Applications and /or from the M2M System.	
SMR-007	The M2M System shall be able to provide capabilities for performing Semantic Mash-up using M2M data from M2M Applications and/or from the M2M System (e.g. to create Virtual Devices, offer new M2M Services, etc.)	

Key functionalities for semantics - 1

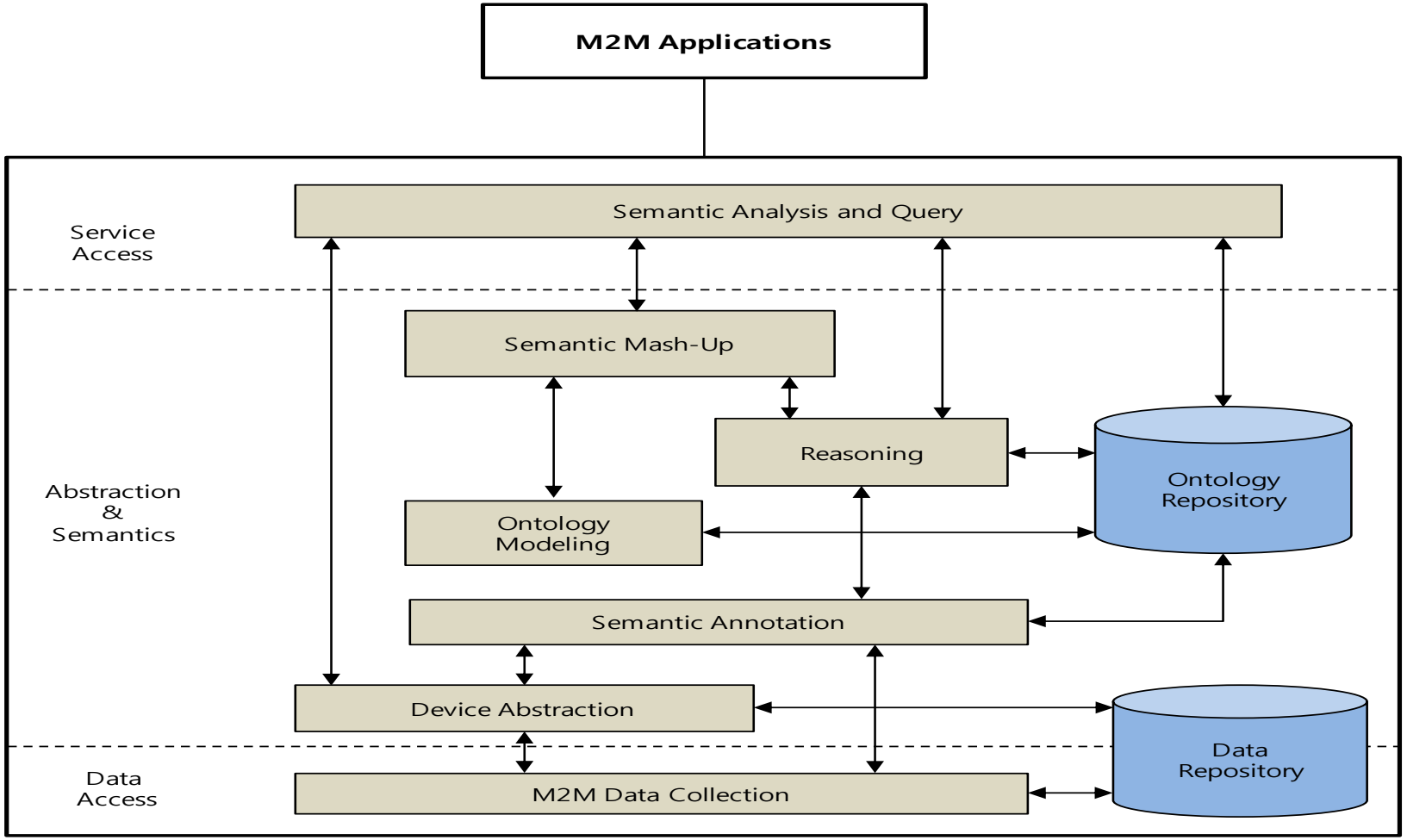

Key functionalities for semantics - 2

- **Semantic annotation**
  - Adding semantic information to M2M resources so that it provides consistent data translation and data interoperability to heterogeneous M2M applications
- **Semantic reasoning**
  - Derive new relations and classifications of semantically annotated data
- **Semantic mash-up**
  - creating a new virtual devices and offering new M2M services

Key issues on standardising semantics and ontologies

- How to share common understanding of the structure of information among M2M nodes?
- How to enable the reuse of domain knowledge?
- How to enable evolving ontologies?
- How to analyse domain knowledge (ontologies)?
- How to make semantic annotations?
- How to generate (or register) new M2M resources/applications based on existing M2M resources/applications?
- How make reasoning?
- How to enable semantic rule?

Specific potential requirements for semantics

- **Semantic annotation** requirements
  - The M2M System shall support semantic annotation of application related data (e.g., containers) that are handled (e.g., transferred) by the M2M System.
- **Ontology** requirements
  - The M2M System shall be described by an ontology containing the entities of the M2M System, their information models and their relationships.
  - The M2M System shall provide support for linking of the ontology describing the oneM2M System with ontologies describing other information models.
  - The M2M System will be able to support extensible ontologies with new domain concepts, in order to support newly created oneM2M Applications.
  - Ontologies used in the M2M System shall support semantic annotation in order to enable automated processing of semantic information.

Support for abstraction and semantics in oneM2M

Overview of modelling aspects

- Domain model

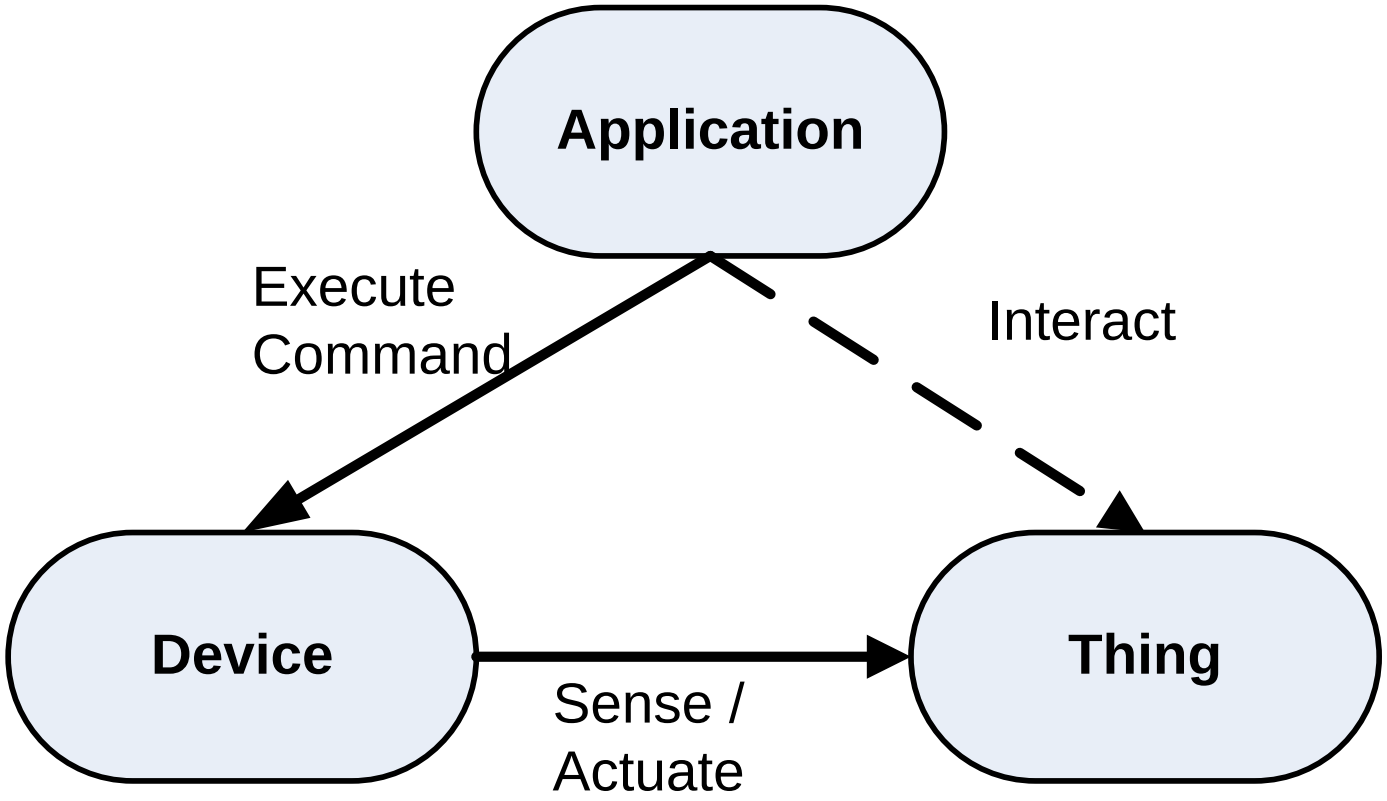

Modelling of devices and things – 1

- Device structure

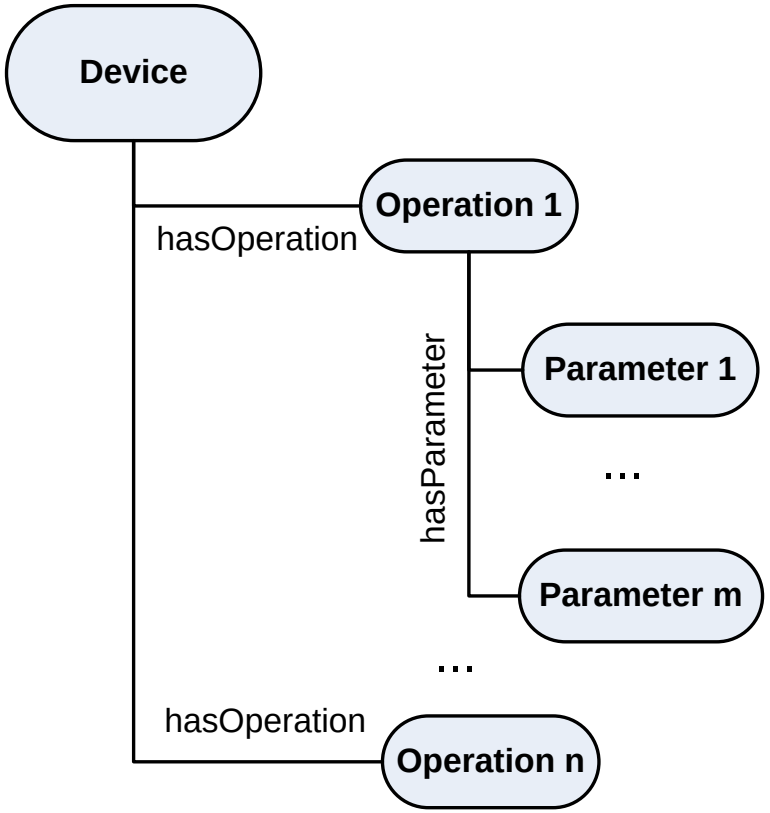

- Thing structure

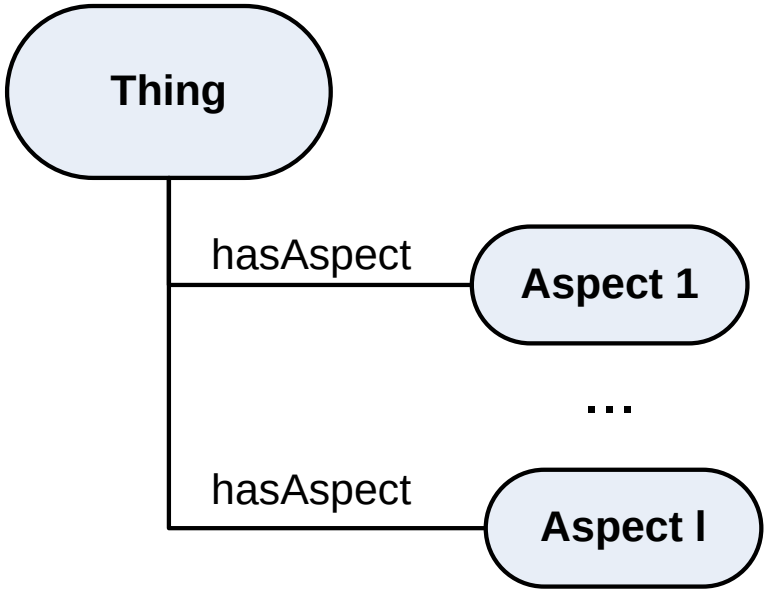

e.g. a room can have a size, a height, a temperature, a noise level etc.

Modelling of devices and things – 2

- Example of device types and their operations

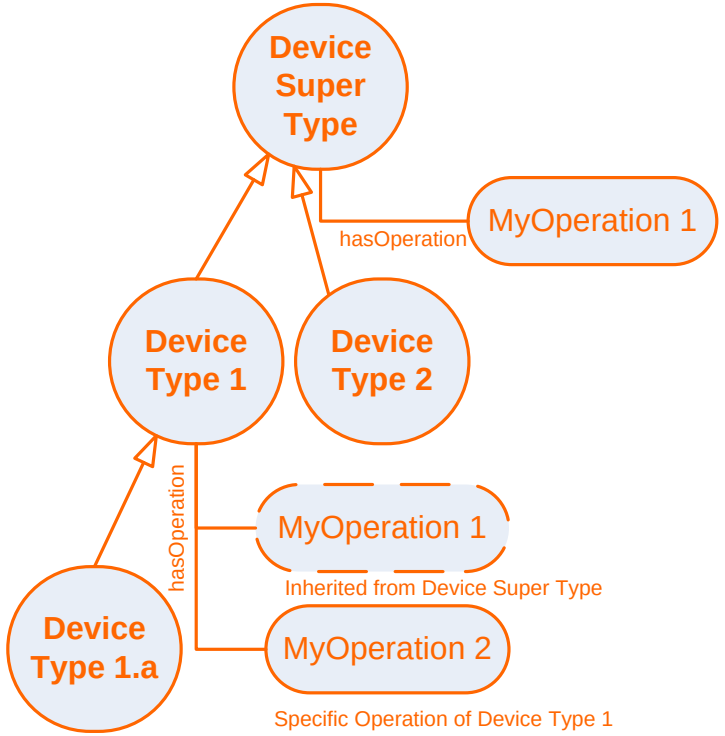

- Example of operation types and their parameters

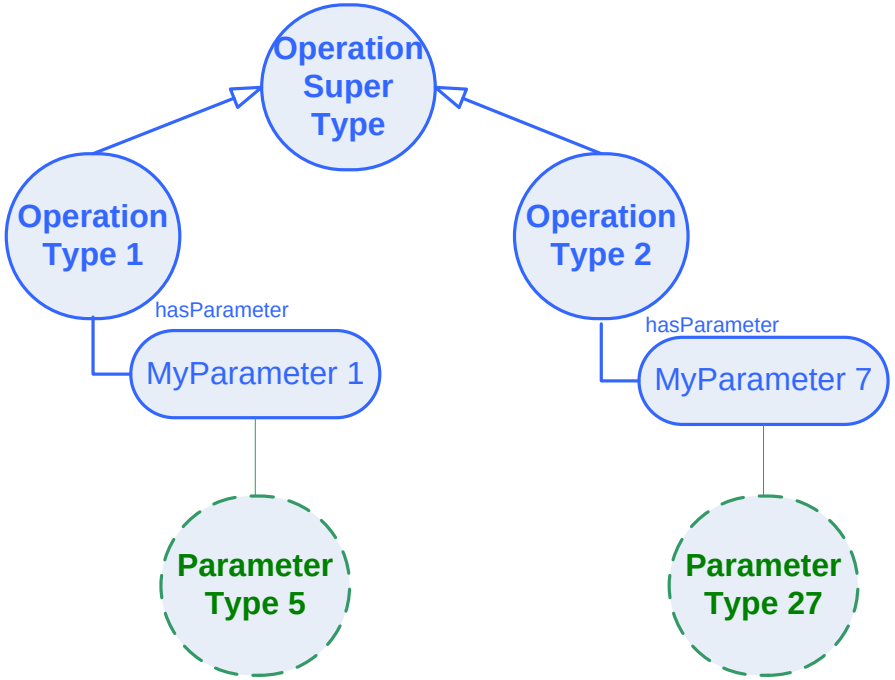

Modelling of devices and things – 3

- Modelling of instances

Example of a device instance based on the type modelling

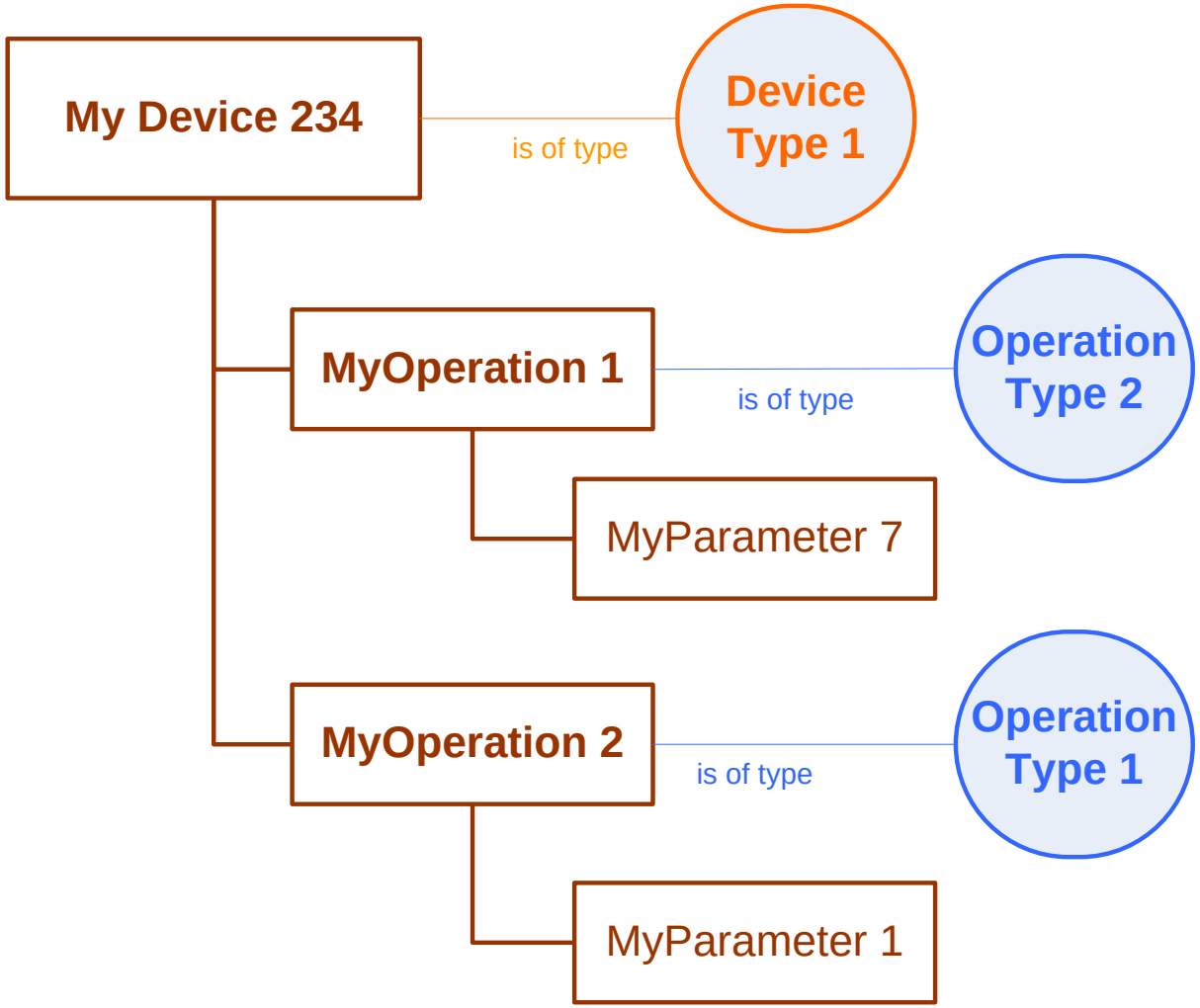

Modelling of devices and things – 4

- Combined view of approach

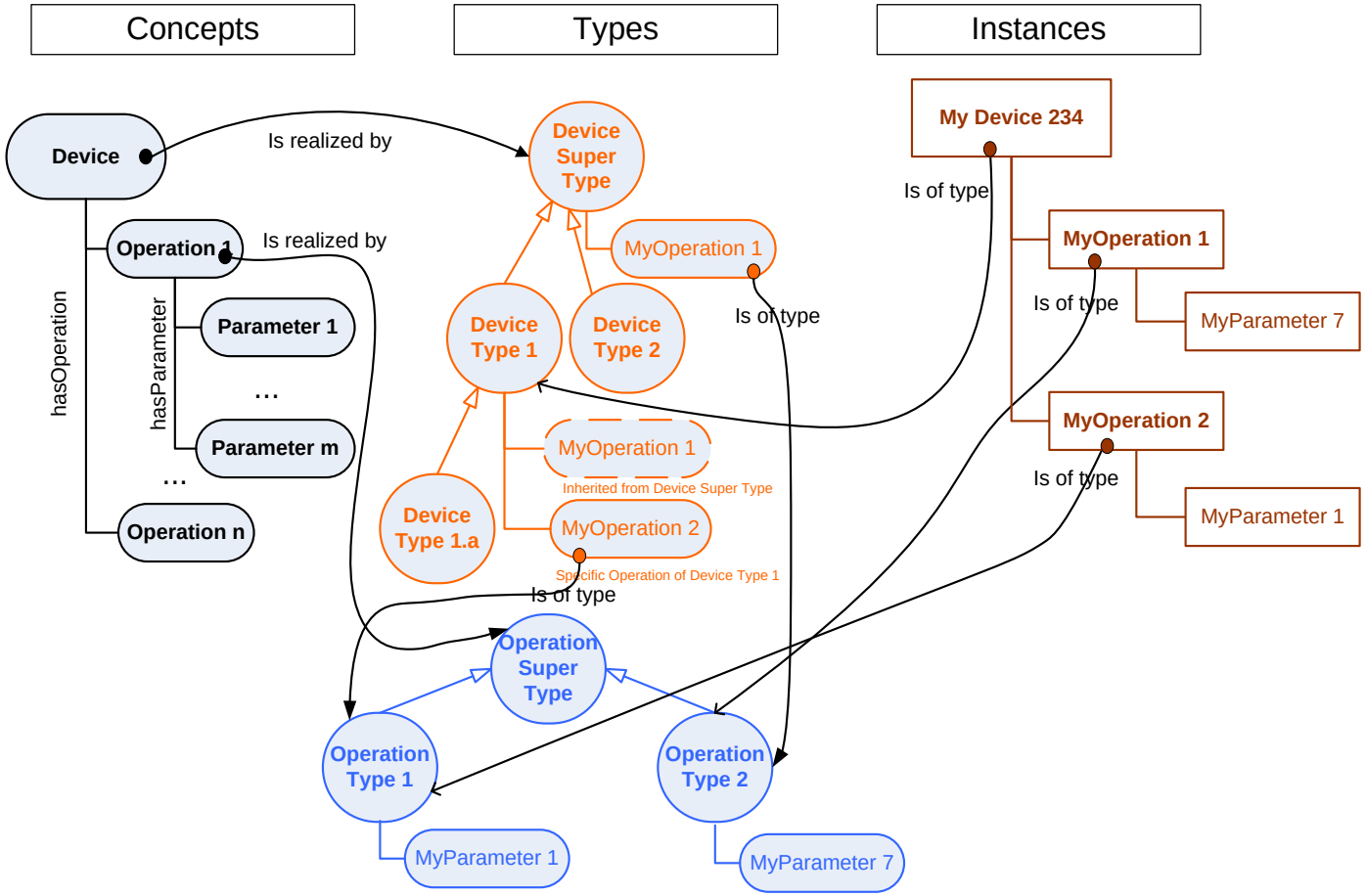

oneM2M architectural considerations

- Semantic annotations

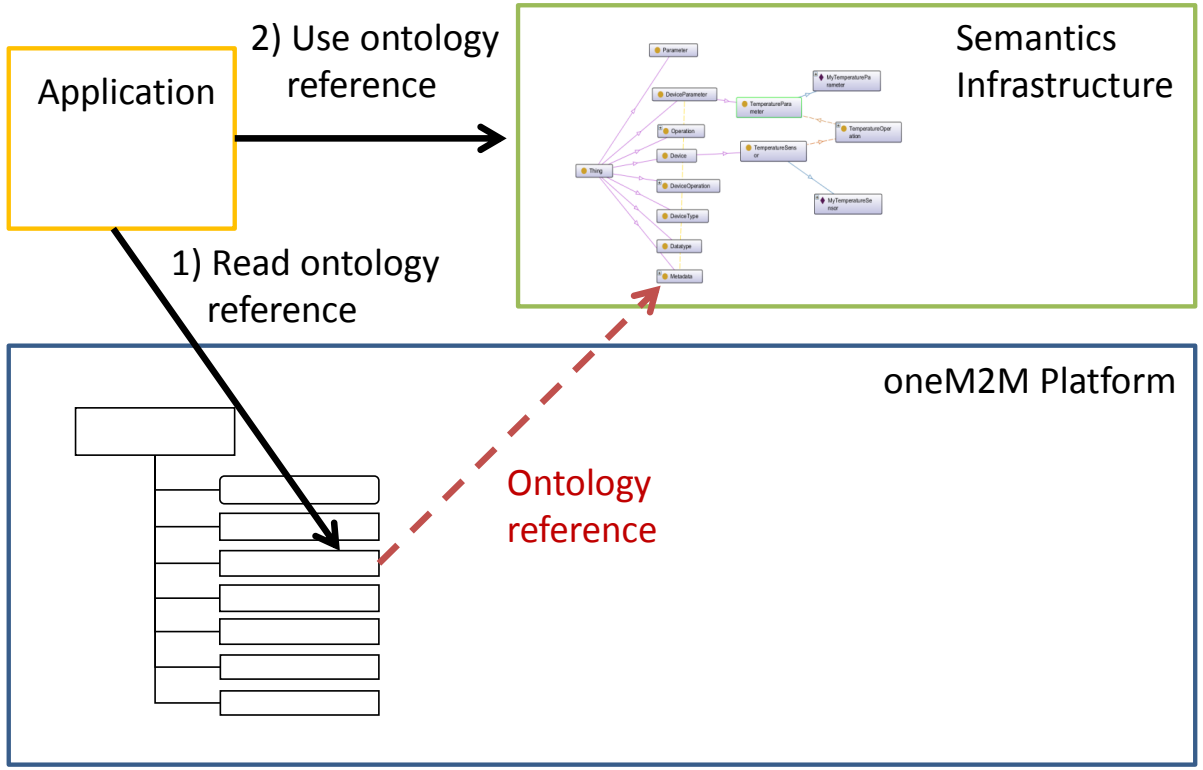

The ontologyRef is a URI that identifies the ontology that is used for representing the respective information.

Interworking with non oneM2M Devices and Area Networks in Rel-1

- Basic functional principles

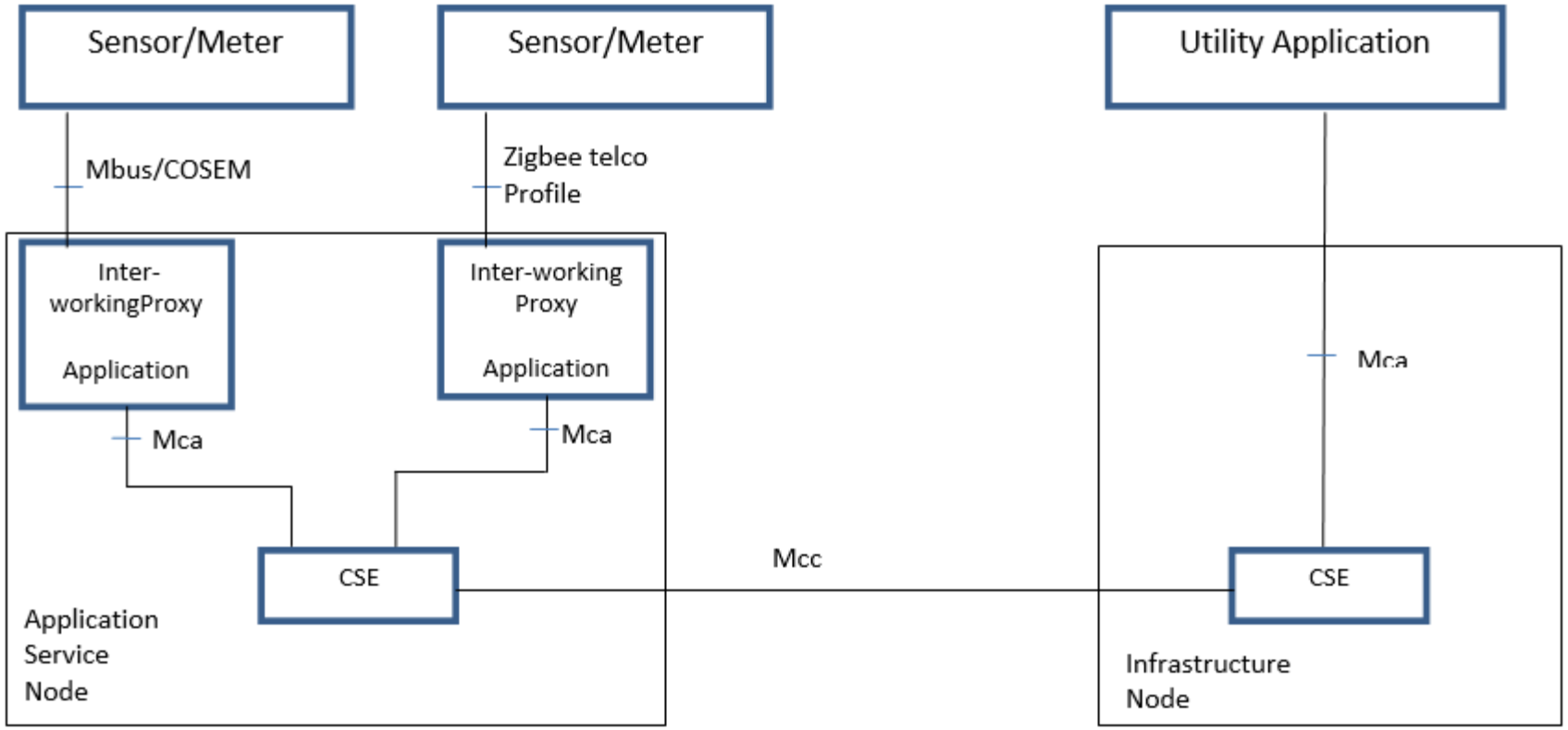

Mapping into oneM2M resources

- High-level resource structure for interworking

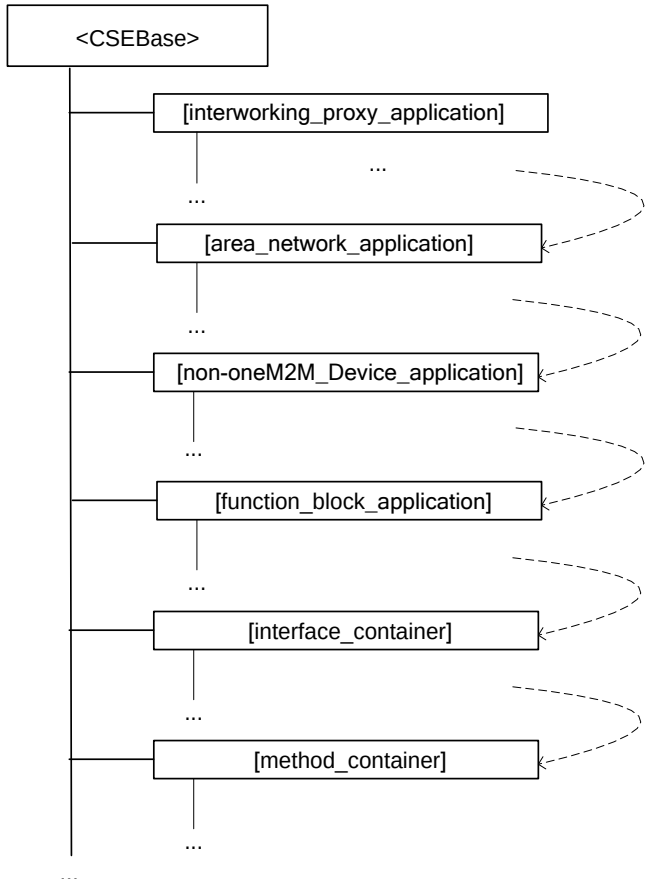

- Interworking Proxy Application Entity (IPE)

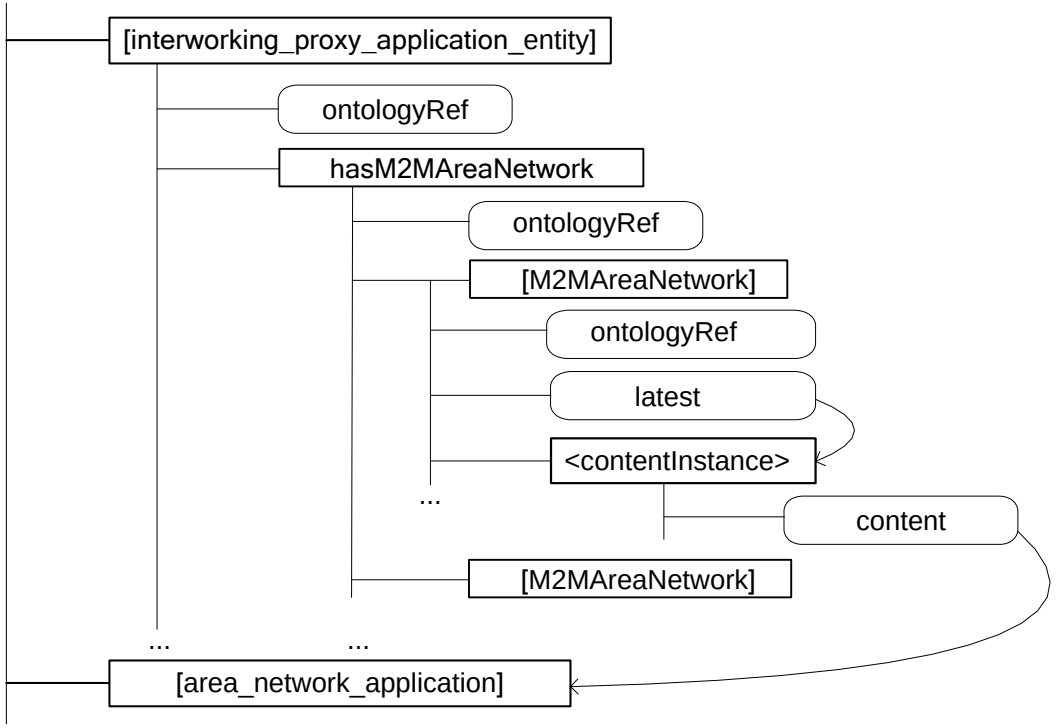

Conclusions and next steps

Conclusions

- In oneM2M Release 1
  - resulted in a set of new use cases that rely on semantic support by oneM2M
  - collected Abstraction technologies and Technologies for a Semantic M2M System
  - contains a proposal how the oneM2M System can be enhanced by including additional semantic capabilities
- The only normative work in oneM2M Release 1
  - the introduction of the “ontologyRef” attribute for Application Entities (AEs), Containers and their Contentnstances.
- The work on the TR continues beyond Rel-1 and leads to normative work that will allow for more dynamic usage of semantic information like semantic discovery, reasoning or mesh-ups

Next steps

- Continuation of Study of Abstraction and Semantics Enablement
  - Future work on Semantics in oneM2M will depend in part upon on ongoing additions to the analysis and recommendations in the Semantics TR.
  - This work item is intended for the ongoing analysis on the use of Semantics within oneM2M which is relevant to pursue the goals of oneM2M.

Doc Type	Spec Number	Title	Milestone dates				Primary Responsible	Notes
			Start	Change Control	Freeze	Approval		
TR	0007	Semantics Technical Report	TP12	TP12	TPz	TPv	WG5	Version 2 and subsequent versions of the Semantics